CUBE CERAMIC
WC seat soft close
MODEL # 39488000

Pure Freude an Wasser

GROHE

Product Description:
CUBE CERAMIC
WC seat soft close

Standard Specification:
with lid
soft close
quick release function
detachable
material: Duroplast
including fixation set
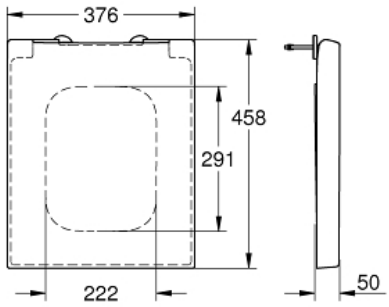
Color:
❑ 39488000 alpine white